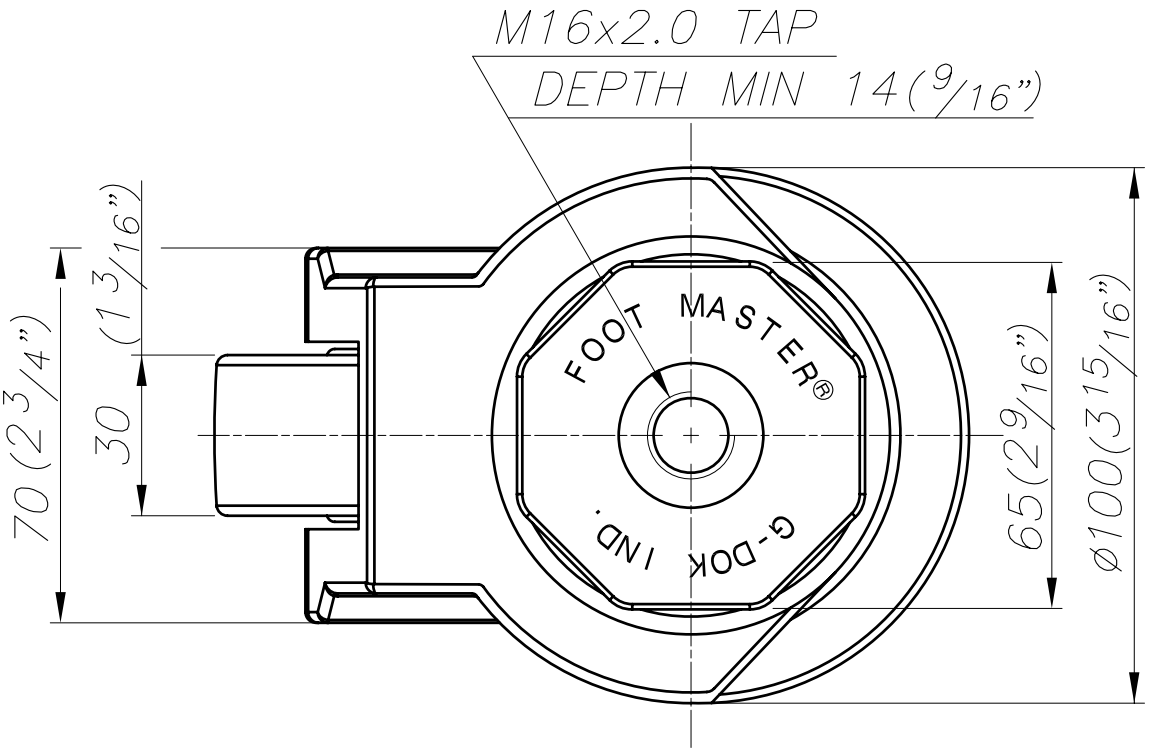

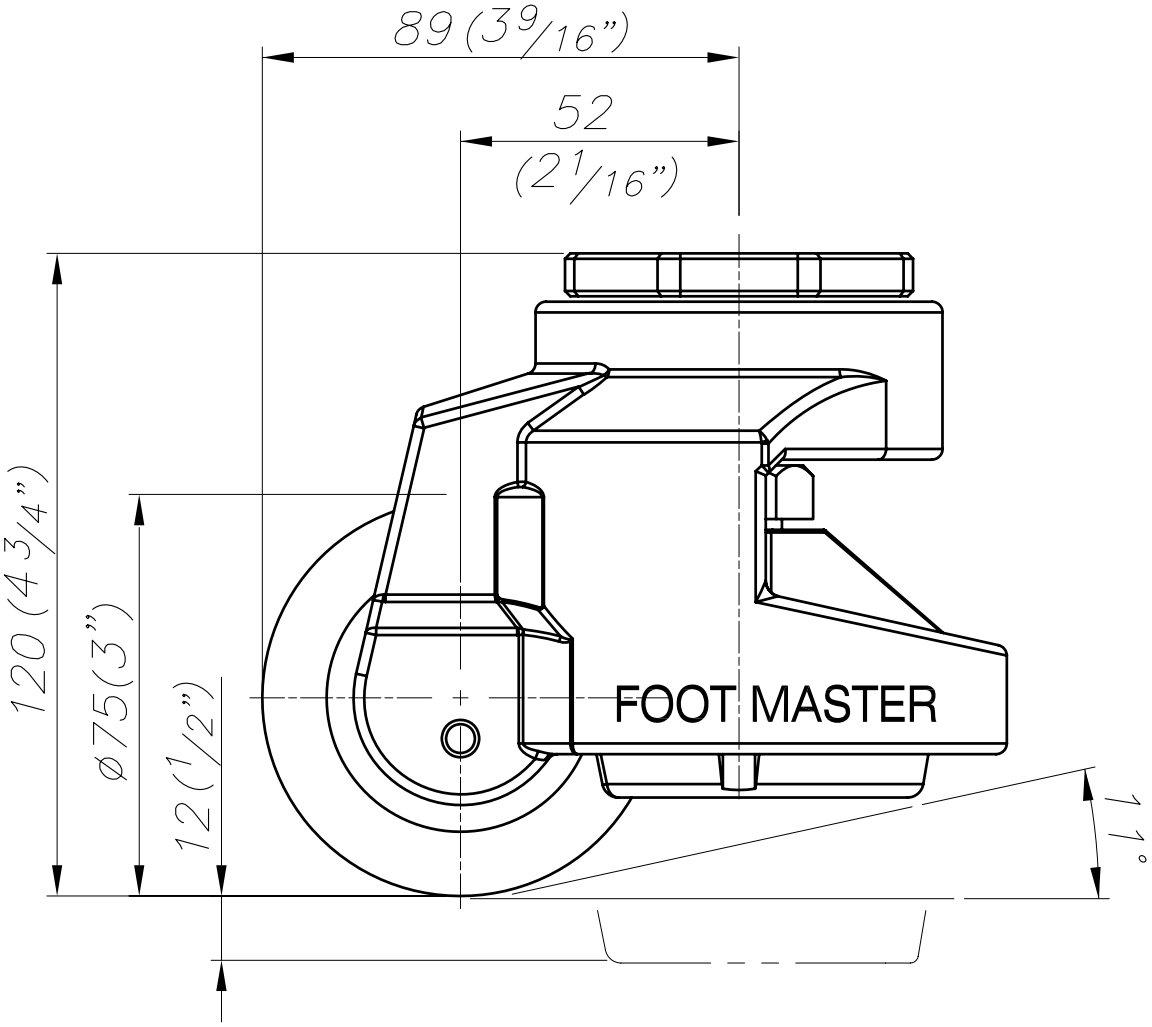

FOOT MASTER ®	FOOMA ®	G-DOK IND.	MODEL NAME	GD-120-S