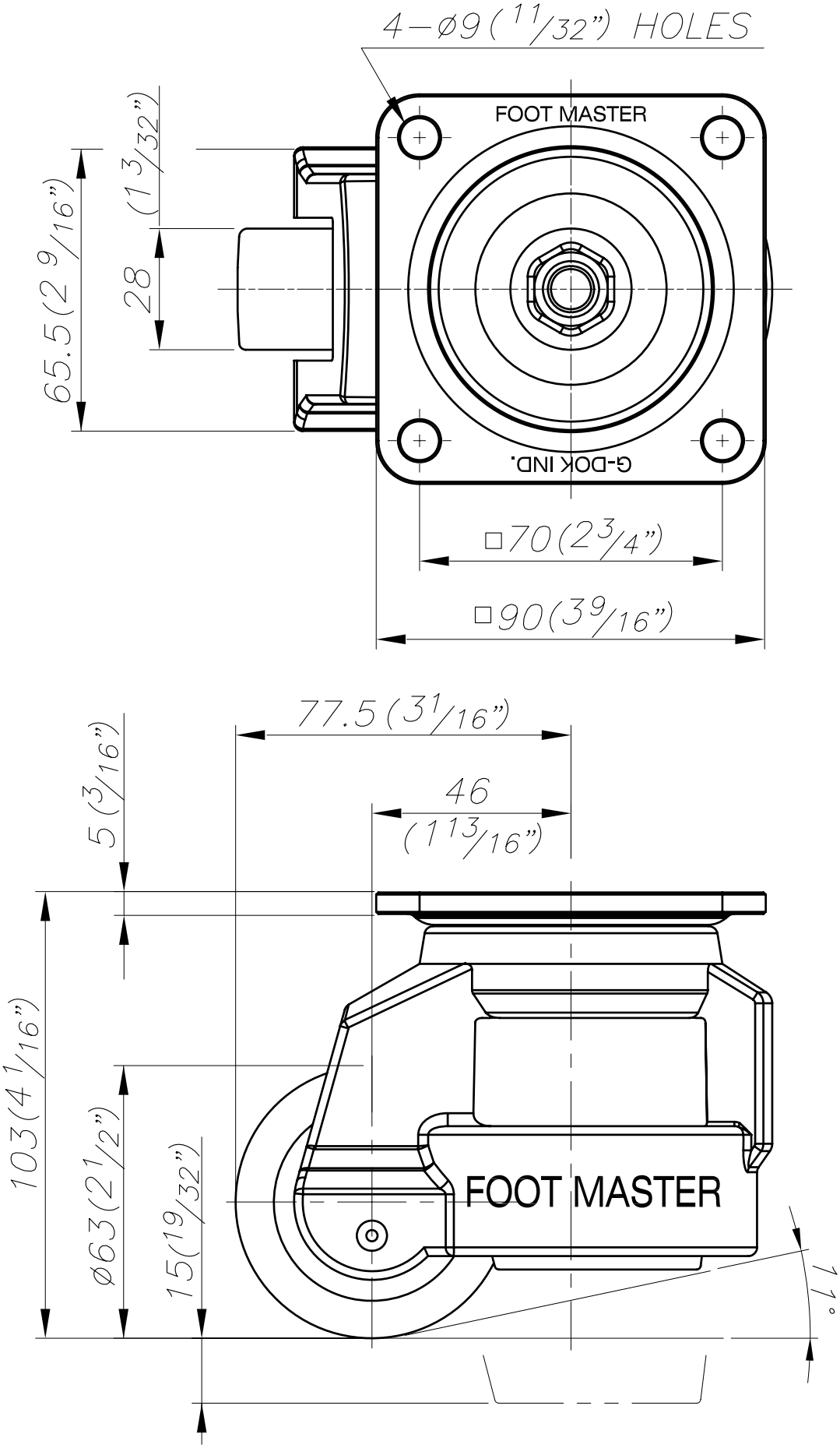

FOOT MASTER ®	FOOMA ®	G-DOK IND.	MODEL NAME	GD-80-F