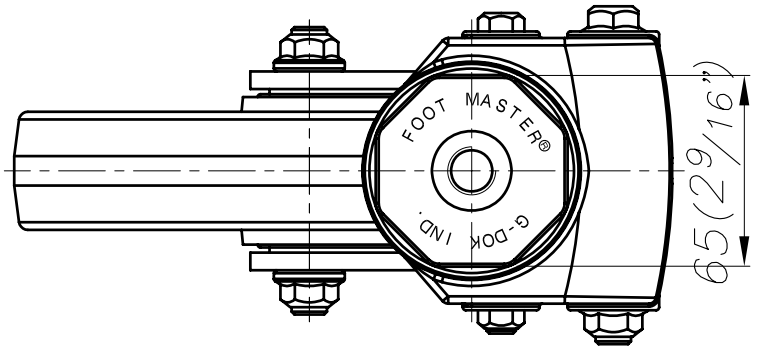

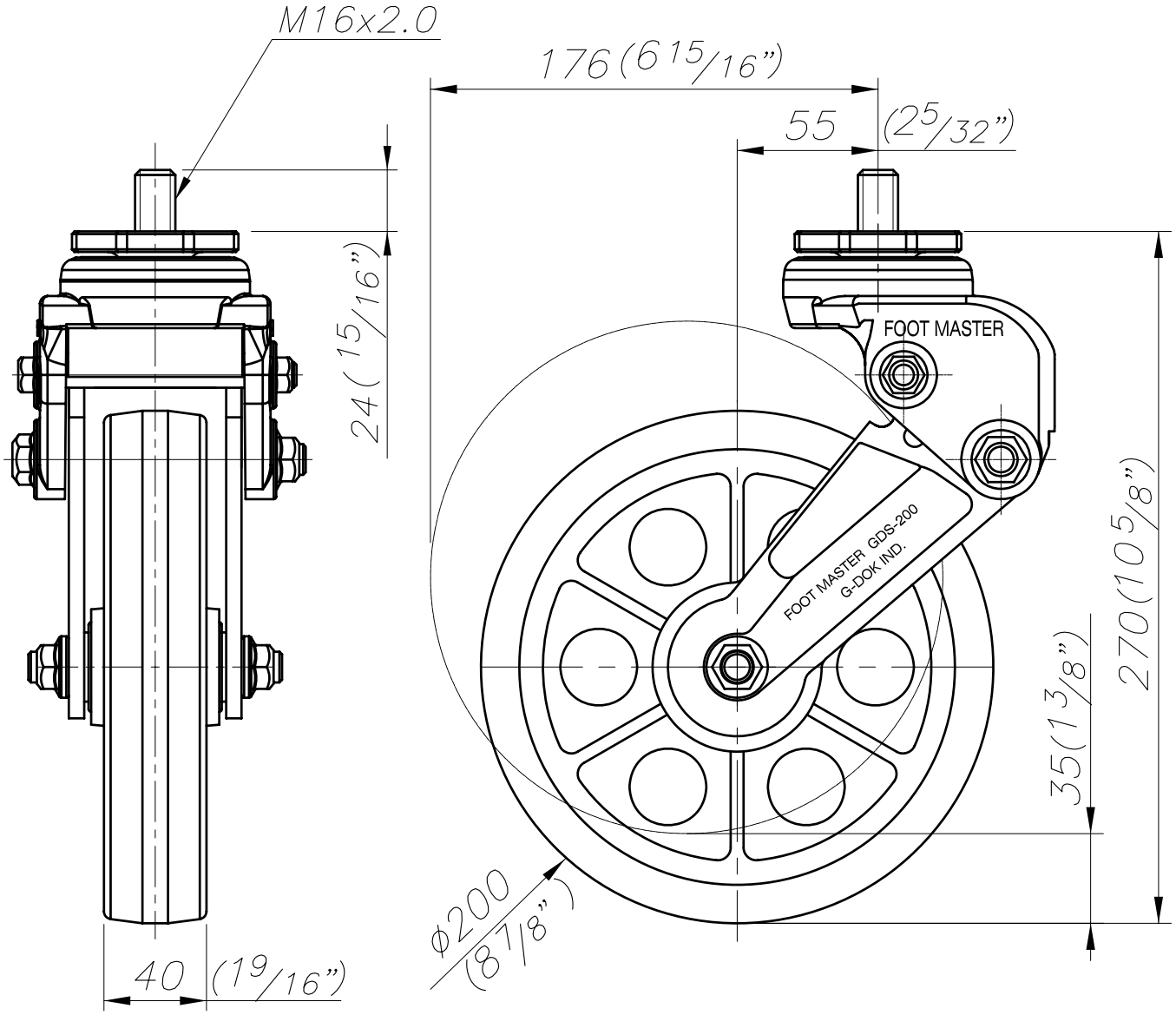

FOOT MASTER ®	FOOMA ®	G-DOK IND.	MODEL NAME	GDS-200-ASS,ARS

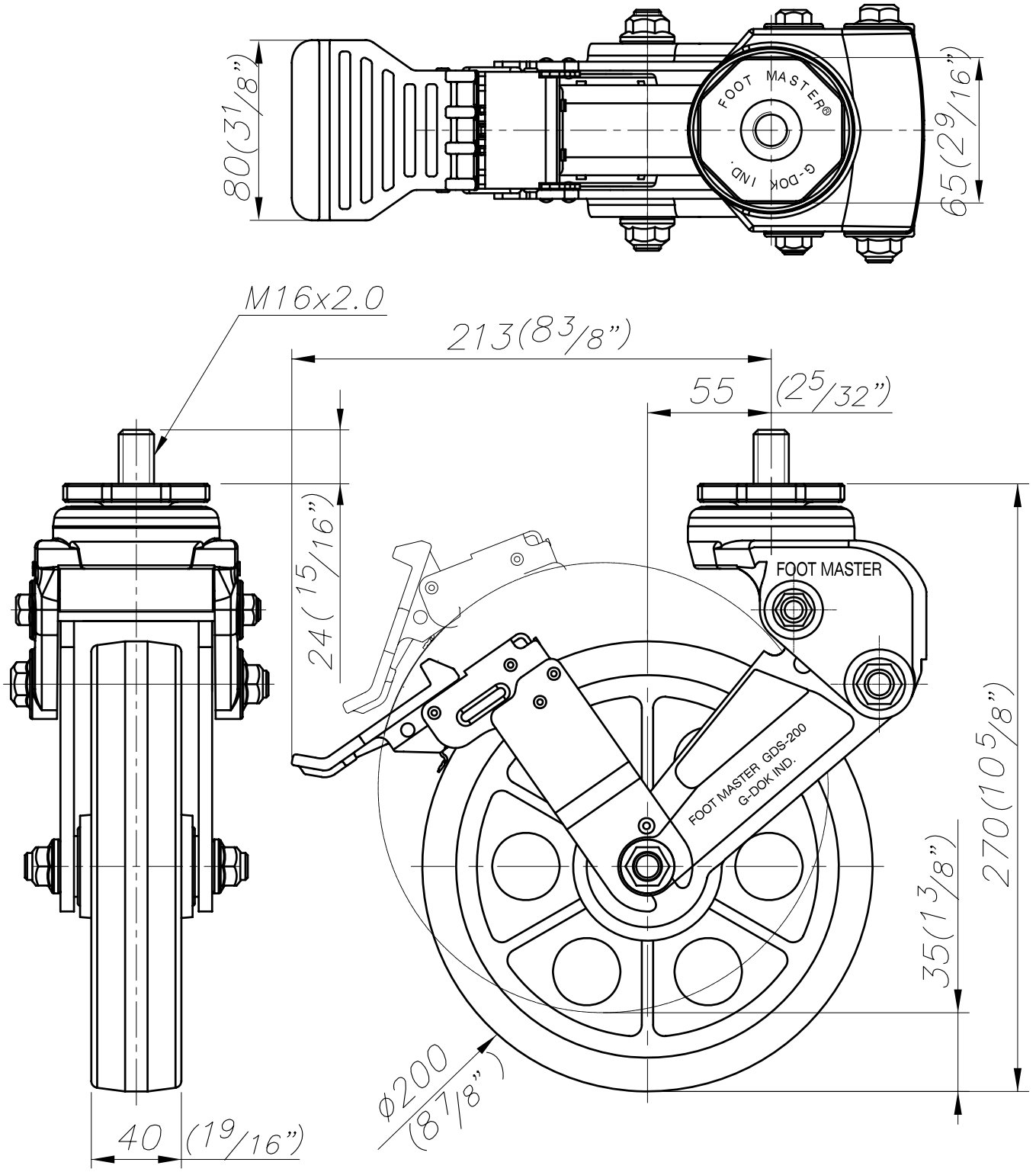

FOOT MASTER ®	FOOMA ®	G-DOK IND.	MODEL NAME	GDS-200-BSS,BRS

A B C E F G