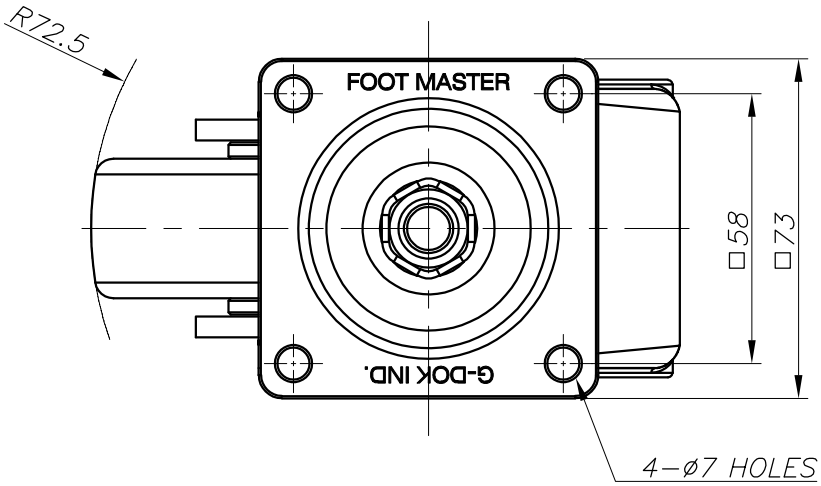

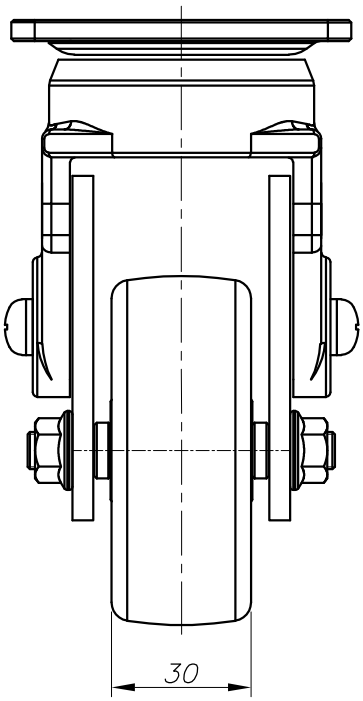

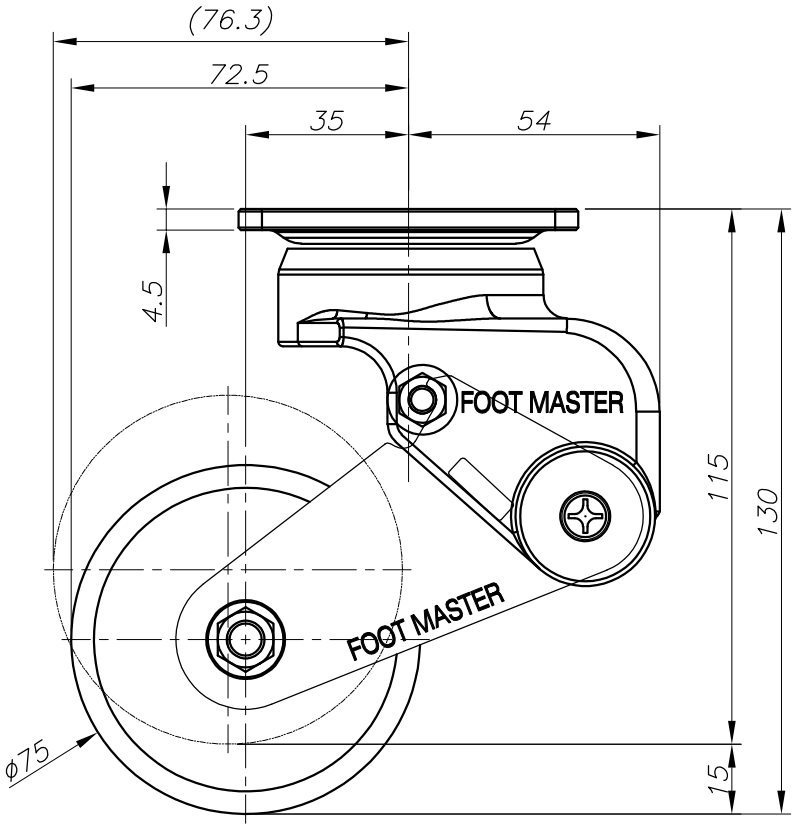

FOOT MASTER®	FOOMA®	G-DOK IND.	MODEL NAME	GDS-75-ASF, ARF