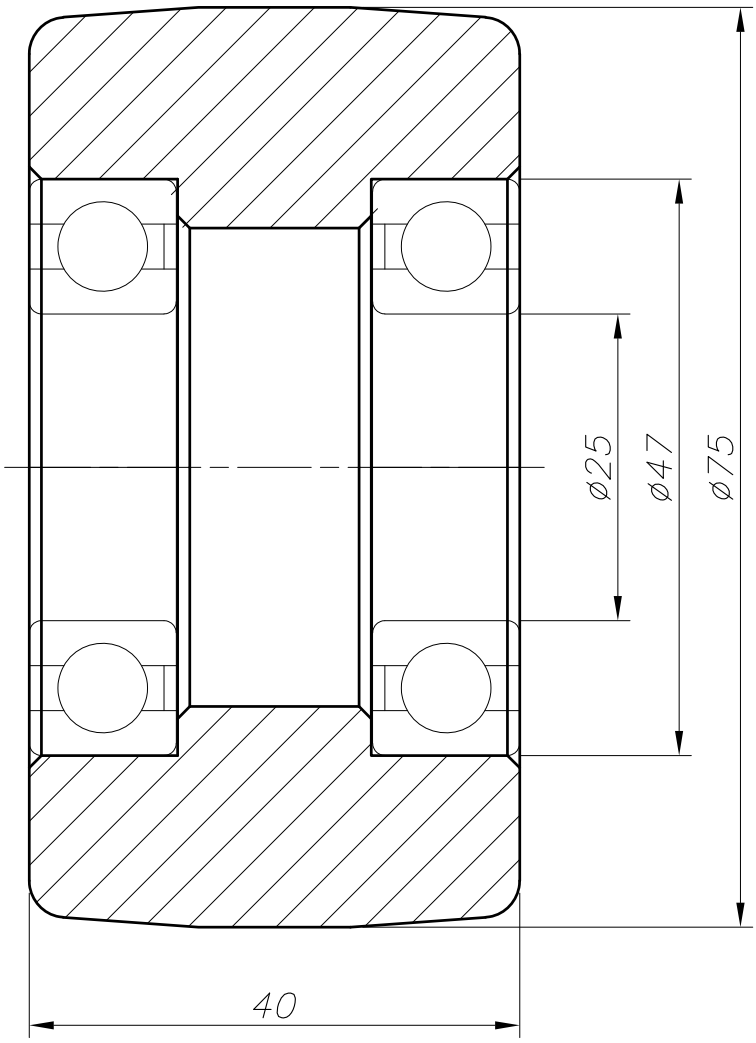

FOOT MASTER®	FOOMA®	G-DOK IND.	MODEL NAME	MCD-75-40	