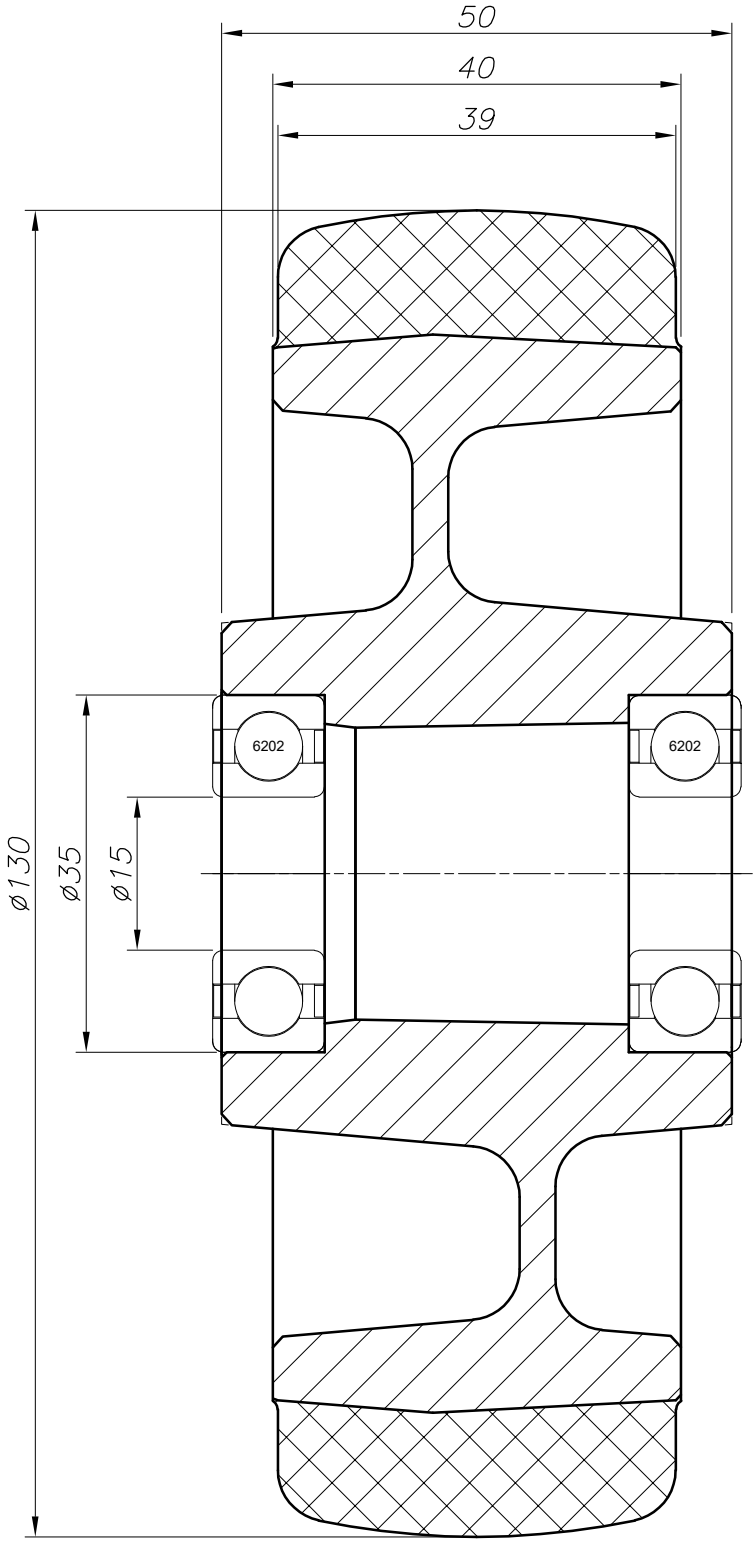

FOOT MASTER®	FOOMA®	G-DOK IND.	MODEL NAME	SUD-130-40