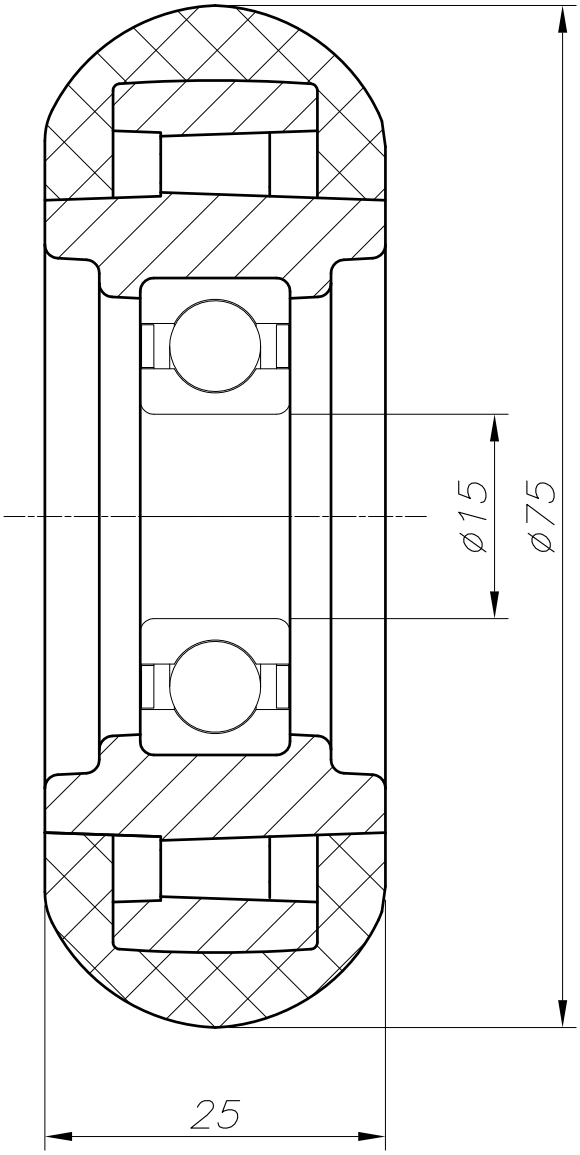

FOOT MASTER ®	FOOMA®	G-DOK IND.	MODEL NAME	SUNS-75-25